NOTES

1. SPECIFICATIONS AND STANDARDS FOR THE CONTROL OF MANUFACTURING OPERATIONS (AS APPLICABLE): FORM, STRAIGHTEN & FIT METAL PARTS PER BAC 5300; RIVET INSTALLATION & SYMBOLS PER BAC 5004; FINISH CODES PER DOCUMENT D2-5000; BOLT & NUT INSTALLATION PER BAC 5008; PART MARKING PER BAC 5307

REVISIONS

LTR	DESCRIPTION	DATE	APPROVED
A	3-77210/3-78150 TCP468-109 (CODE: DWG UPD) INC ADCNS: W1: WILL NOT BE RELEASED W2: PRR0458-9500 W3: PRR458-9500	84-05-25 84/05/25 84/06/04 84/06/04	DWN: J HARRIS CHK: 526-2180 R.DRUNAGEL DWG QUAL: R GREEN ORG: J BURLEIGH B/R GREEN
B	PRR94000 (F34601-92-D-1120) (CODE: DWG UPD) INCORPORATED ADCNS ADCN CHANGE NUMBER W4: PRR458-9500 1) ORG CPC (Y-8CED) WAS CPC (Y-78150) 2) CAGE CODE WAS CODE IDENT NO.	02/02/07 02/02/08 02/02/08 02/02/08	DWN: T.SHALINSKY CHK: 526-8255 Fred Bean DWG QUAL: Fred Bean PROJECT APPROVAL: Fred Bean

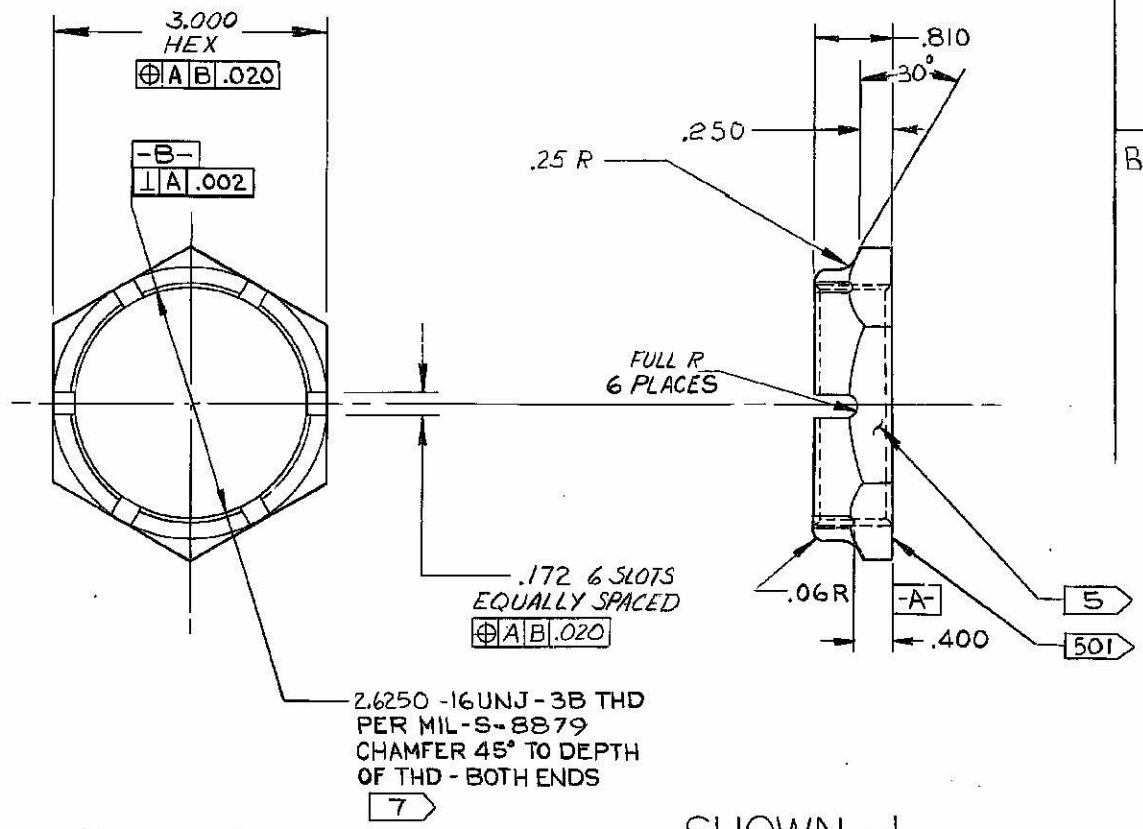

SHOWN -1

BOEING PROPRIETARY. LIMITED RIGHTS LEGEND. Contractor: The Boeing Company. Contract: F34601-92-D-1120. Rights in technical data are controlled by the applicable clause in the identified contract.

FOR NOTES, PARTS LIST AND APPLICATION DATA SEE PL458-56170

LIMITED RIGHTS LEGEND

Contract No. F33657-79-C-0439

Contractor: The Boeing Company

Explanation of Limited Rights Data Identification Method Used

APPLIES TO ENTIRE DOCUMENT

Those portions of this technical data indicated as limited rights data shall not, without the written permission of the above Contractor, be either (a) used, released or disclosed in whole or in part outside the Government, (b) used in whole or in part by the Government for manufacture or, in the case of computer software documentation for preparing the same or similar computer software, or (c) used by a party other than the Government except for: (i) emergency repair or overhaul work only, by or for the Government, where the item or process concerned is not otherwise reasonably available to enable timely performance of the work, provided that the release or disclosure hereof outside the Government shall be made subject to a prohibition against further use, release or disclosure; or (ii) release to a foreign government, as the interest of the United States may require, only for information or evaluation within such government or for emergency repair or overhaul work by or for such government under the conditions of (i) above. This legend, together with the indications of the portions of this data which are subject to such limitations shall be included on any reproduction hereof which includes any part of the portions subject to such limitations.

E4189

PART NUMBER	NEXT ASSY	USED ON	EFFECTIVITY	REV LTR
		KC-135R		
	APPLICATION			

QTY REQD	QTY REQD	FIND NUMBER	PART OR IDENTIFYING NUMBER	NOMENCLATURE OR DESCRIPTION	MATERIAL AND SPECIFICATION	CODE IDENT NO	HT TR	FINISH	PT MK	REV LTR

PARTS LIST

DIMENSIONING & TOLERANCING PER ANSI (USASI) Y14.5

UNLESS OTHERWISE SPECIFIED
DIMENSIONS ARE IN INCHES
TOLERANCES: ANGLES ± 1/4°
DECIMALS .XX ± .03
DECIMALS .XXX ± .010
RIVET & BOLT EDGE MARG ± .05
BEND RADII ± .01 ON .03 & .05
± .03 ON .09 & GREATER
SHEET METAL CORNER RADII
INT .19/.15 EXT .25/.00

REVIEW & APPROVAL

DWG QUAL		
STRUCT	E. J. STUCZYNSKI	81-07-24
MATL & PRCS	David J. Schellerman	82-01-11 81-07-17
WTS	N. LARSON	81-08-18

CHANGE/ITEM NUMBER WBS0111 FA
PRR 458-1026
ITEM 002 PIN 02-6100

CONTRACT NUMBER F-33657-79-C-0439

DWN	R. MRAMOR	81-02-20
CHK	E. KNYSZEK	81-04-28
ENGR	J. PASEK	81-08-19
ORG		
PROJECT APPROVAL	[signature]	81-01-22

THE BOEING COMPANY
CORPORATE OFFICES SEATTLE, WASHINGTON 98124

NUT - TRUNNION BOLT MAIN LANDING GEAR

SIZE C CAGE CODE: 82918 458-56170

SCALE 1/1 SH 1 OF 1

DWG ORIG BY (ORG) CPC(Y-8CED)

REV B

458-56170

DRAWING RECORDS CLERK: D060001215 REV 3/73